DRC

PZ22-12000027

07/02/2025

B.C.H.C.E.D. REF. NO. 200617002

FOR SIGN ASSEMBLIES WITH MAXIMUM 8.75 SQUARE FOOT PANEL AREA

Typical Details

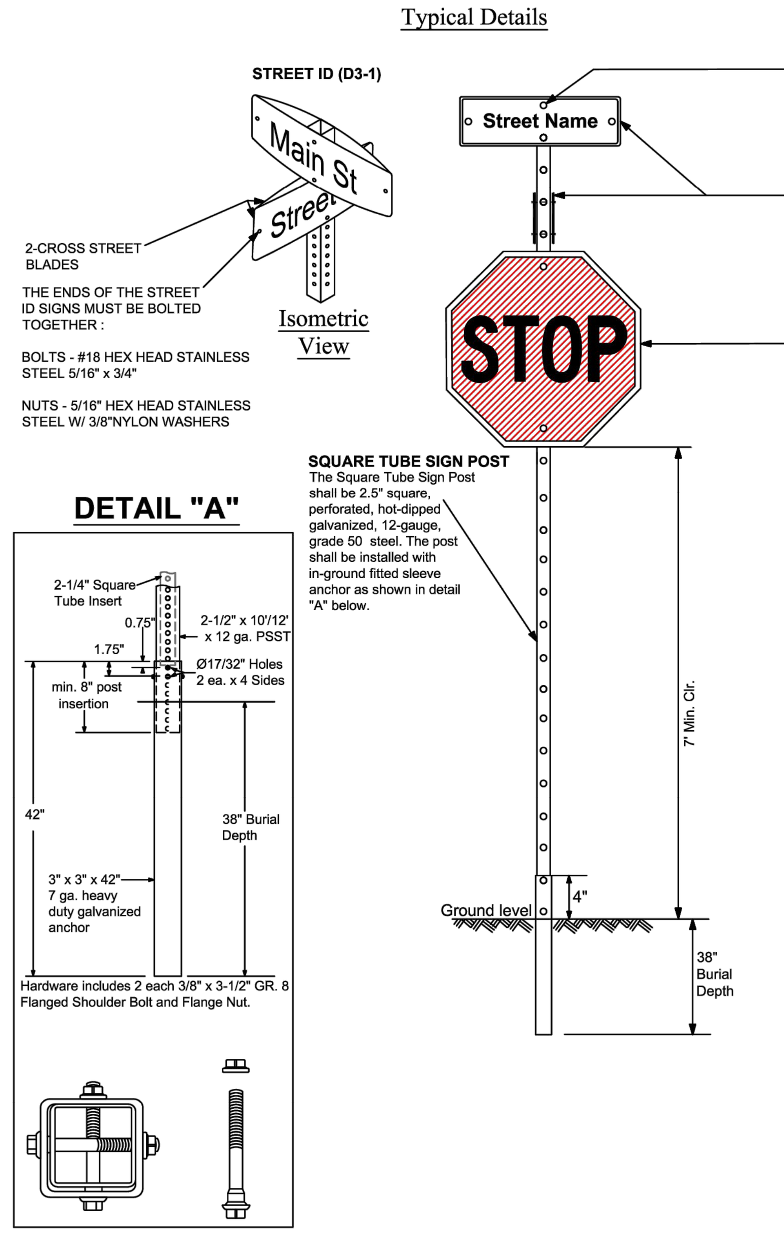

FOR SIGN ASSEMBLIES WITH GREATER THAN 8.75 SQUARE FOOT PANEL AREA WITH SUPPLEMENTAL SIGN

Typical Details

STREET ID (D3-1) MATERIALS:

LETTERS
WHITE TYPE XI SHEETING
LETTERING OF STREET NAME SIGNS SHALL BE COMPOSED OF A COMBINATION OF LOWERCASE LETTERS WITH INITIAL UPPERCASE LETTERS

BORDER
BORDER WIDTHS WILL VARY BASED ON LETTER HEIGHTS

LETTER HEIGHTS - BORDER WIDTHS
4 INCH LETTER = 0.375 INCH BORDER WIDTH
6 INCH LETTER = 0.500 INCH BORDER WIDTH
8 INCH LETTER = 0.750 INCH BORDER WIDTH

GREEN BACKGROUND
GREEN TRANSLUCENT INK SILK-SCREENED CLEAR-COATED OR ELECTRO-CUT (EC) FILM OR EQUIVALENT

LETTER SIZES
SEE MUTCD TABLE 2D-2 (PG 163) FOR MINIMUM LETTER HEIGHTS
LENGTH VARIES BY STREET NAME

HARDWARE
BOLTS - #18 HEX HEAD STAINLESS STEEL 5/16" x 3"
NUTS - 5/16" STAINLESS STEEL W/ NYLON WASHERS.

REGULATORY SIGN
WHEN NO STREET ID IS PRESENT THE STOP SIGN SHALL BE MOUNTED FLUSH TO THE TOP OF THE POST WHILE MAINTAINING 7 FEET MIN. CLEARANCE BETWEEN BOTTOM OF SIGN AND GROUND LEVEL. ANY SIGN INSTALLED BACK TO BACK WITH THE STOP SIGN SHALL BE SMALLER THAN THE STOP SIGN.

STOP, DO NOT ENTER OR YIELD
WHITE TYPE XI SHEETING
PRESSURE-SENSITIVE RED TRANSLUCENT INK SILK-SCREENED CLEAR-COATED OR ELECTRO-CUT (EC) FILM OR EQUIVALENT.

HARDWARE
FRONT: #18 HEX HEAD STAINLESS STEEL 5/16" x 3" BOLT W/ 3/8" NYLON WASHER
BACK: 5/16" HEX HEAD STAINLESS STEEL NUT W/ 3/8" STAINLESS STEEL WASHER.

NOTES:
1. ALL TYPE XI SHEETING UTILIZED MUST BE ON THE FDOT APL LIST.
2. SEE BCTED TECHNICAL POLICY MEMO #TPM - 16-001 - SPECIFICATIONS FOR RETROFLECTIVE TRAFFIC SIGN MATERIALS.

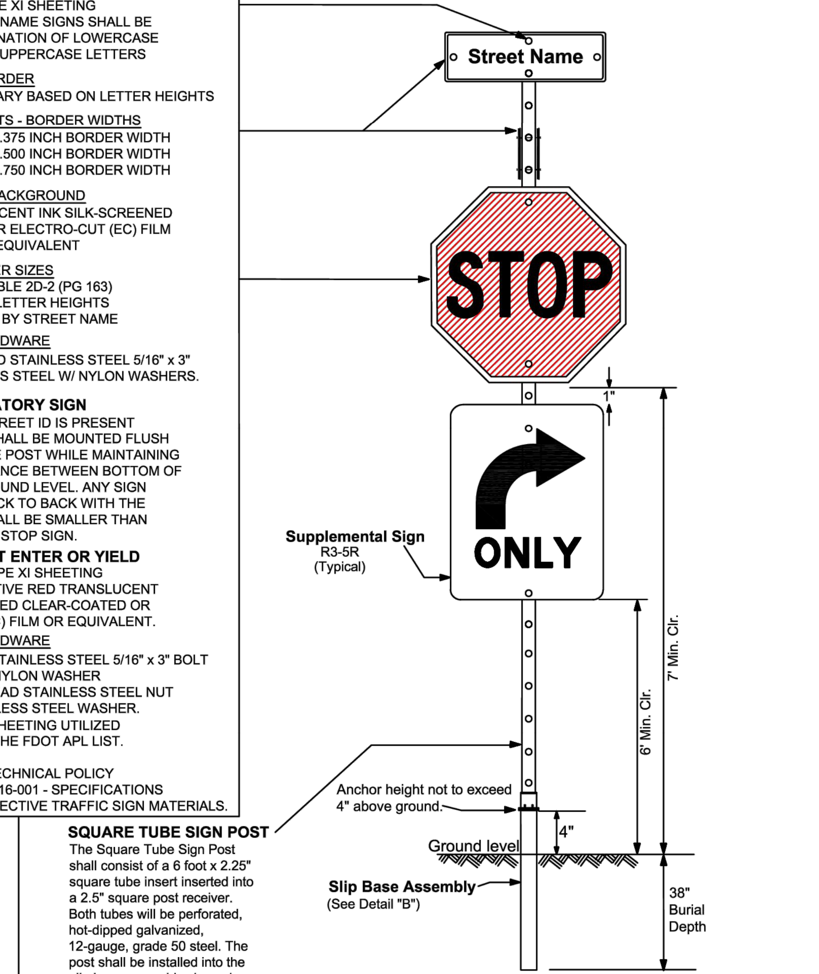

SQUARE TUBE SIGN POST
The Square Tube Sign Post shall consist of a 6 foot x 2.25" square tube insert inserted into a 2.5" square post receiver. Both tubes will be perforated, hot-dipped galvanized, 12-gauge, grade 50 steel. The post shall be installed into the slip base assembly shown in detail "B".

DETAIL "B"

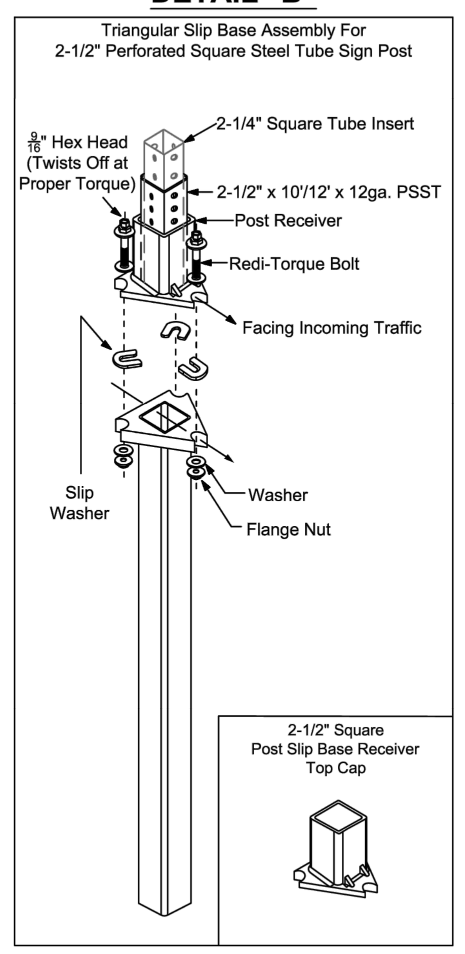

Notes:
1. Dimensions and certain details for the parts used to assemble the slip base connections are intentionally not shown. Slip base connections are patented manufactured products that are in compliance with NCHRP 350 crash test criteria. The base connection details are only shown on this plan to illustrate how the parts are assembled. The complete assembly must be designed to withstand 150 mph Base Wind Speed per 2013 AASHTO Standard Specifications for Structural Supports for Highway Signs, Luminaires, and Traffic Signals, 6th edition and interims.

2. For standard ground sign installation, see detail entitled " Ground Sign Assembly Details".

REVISIONS	
DATE	DESCRIPTION
02-28-2020	ADDED ISOMETRIC VIEW
02-05-2021	UPDATED POST BASE HEIGHT
06-22-2023	UPDATED SIGN POST NOTES

BROWARD COUNTY FLORIDA

PUBLIC WORKS DEPARTMENT
TRAFFIC ENGINEERING DIVISION
DESIGN BY: CARMELO CARATOZZOLO, P.E. | SCALE: NTS
DRAWN BY: STEPHON RAMOUTAR
CHECKED BY: CARMELO CARATOZZOLO, P.E.

STOP SIGN AND STREET IDENTIFICATION ASSEMBLY TYPICAL DETAILS

SHEET NO. 1 OF 1

GUIDE TO USE THIS STANDARD:
1. Calculate the Total Panel Area and the centroid 'C' for an individual sign or a sign cluster.
2. Determine the height 'H' from the groundline for the individual sign or the cluster.
3. Consult the Post Size Table and find the intersection point.
4. Design the post and the foundation according to the required Post Size and Assembly Details.

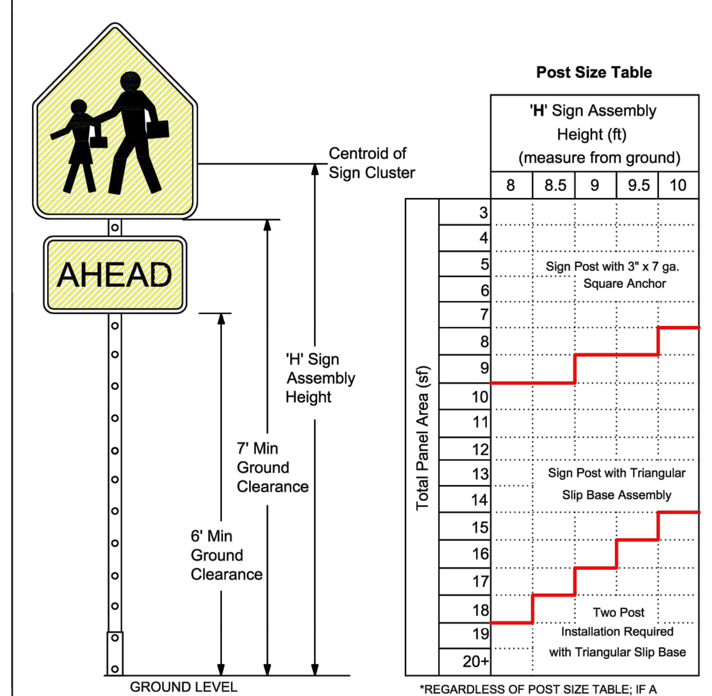

*REGARDLESS OF POST SIZE TABLE; IF A SIGN PANEL IS EQUAL TO OR GREATER THAN 4 FEET IN WIDTH, A TWO POST INSTALLATION IS REQUIRED WITH A TRIANGULAR SLIP BASE.

Sign Post with 3" x 7 ga. Square Anchor

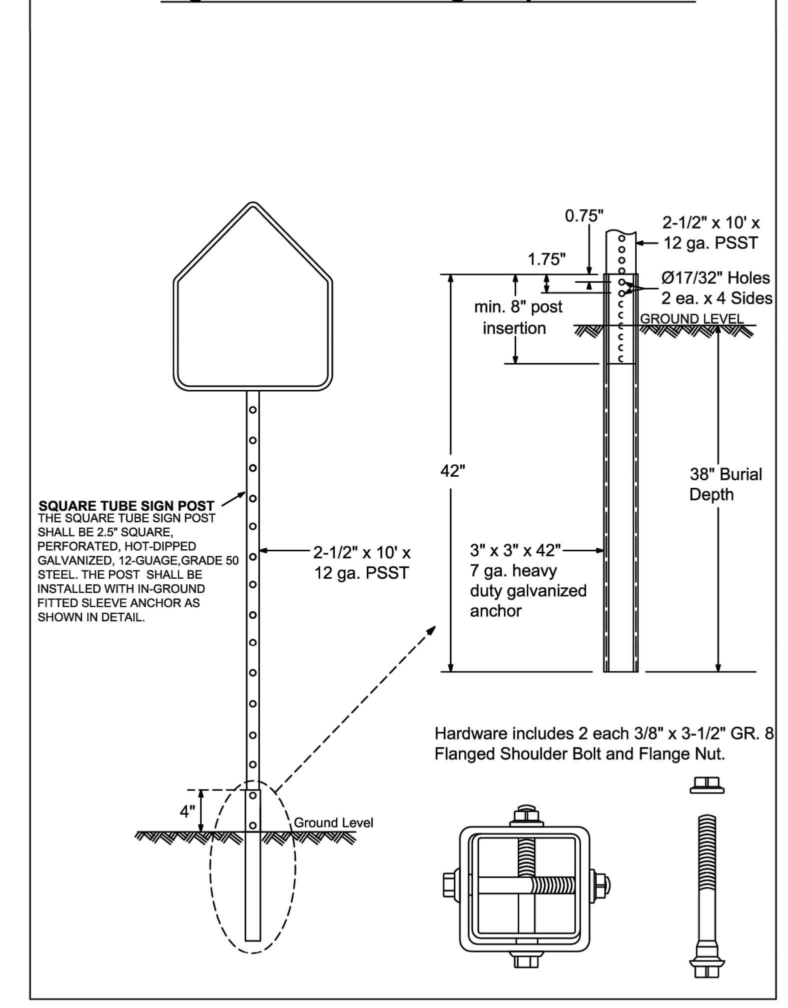

Sign Post with Triangular Slip Base

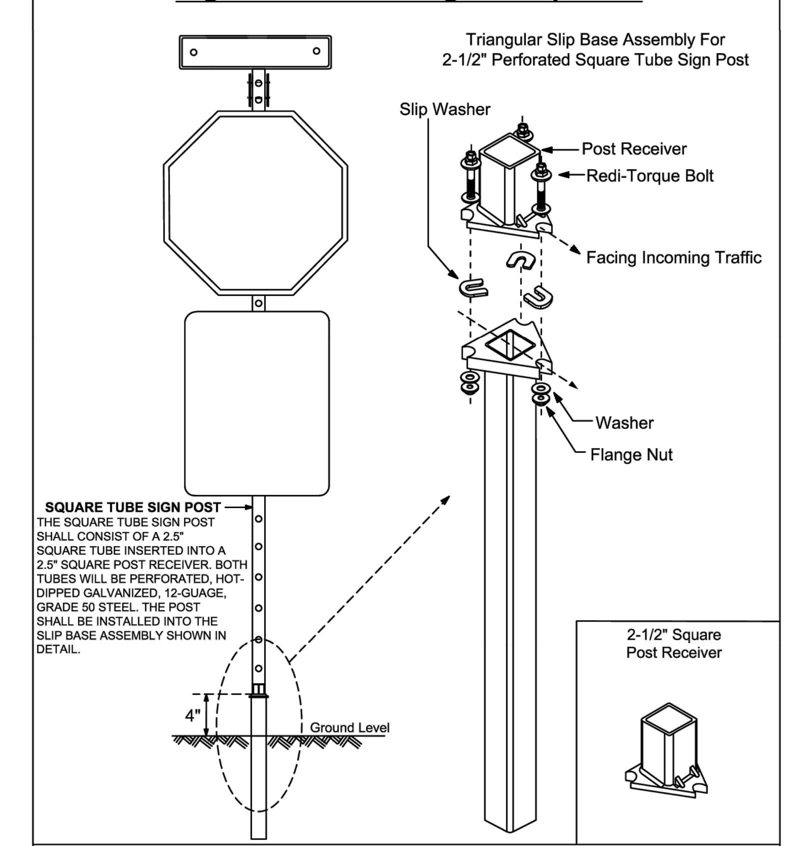

Note: Dimensions and certain details for the parts used to assemble the slip base connections are intentionally not shown. Slip base connections are patented manufactured products that are in compliance with NCHRP 350 crash test criteria. The base connection details are only shown on this plan to illustrate how the parts are assembled. The complete assembly must be designed to withstand 150 mph Base Wind Speed per 2013 AASHTO Standard Specifications for Structural Supports for Highway Signs, Luminaires, and Traffic Signals, 6th edition and interims.

REVISIONS	
DATE	DESCRIPTION
03-21-2017	UPDATED POST SIZE
11-24-2020	ADDED POST SIZE NOTE
02-05-2021	UPDATED POST BASE HEIGHT

BROWARD COUNTY FLORIDA

PUBLIC WORKS DEPARTMENT
TRAFFIC ENGINEERING DIVISION
DESIGN BY: YVES D'ANJOU, P.E. | SCALE: NTS
DRAWN BY: STEPHON RAMOUTAR
CHECKED BY: ANDREW SEBO, P.E., PTOE

GROUND SIGN ASSEMBLY DETAILS

SHEET NO. 1 OF 1

DROP LANE LENGTH TABLE

SPEED (MPH)	MIN. DISTANCE	PREFERRED DISTANCE
30-35 MPH	400'	600'
40-45 MPH	600'	800'

DIRECTIONAL ARROWS REQUIRED TABLE

DISTANCE	ARROWS REQ'D
100' OR LESS	1 ARROW
101'-149'	2 ARROWS
150'-200'	3 ARROWS

*ONE ADDITIONAL ARROW FOR EACH ADDITIONAL 100' OF STORAGE

SPECIAL EMPHASIS CROSSWALK MARKINGS NOTES
1. SPECIAL EMPHASIS CROSSWALK MARKINGS ARE RESERVED FOR MID-BLOCK CROSSINGS, INTERSECTIONS WITH STATIONED CROSSING GUARDS, AND/OR HIGH PEDESTRIAN ACTIVITY DOCUMENTED BY A STUDY AND MUST BE ADA COMPLIANT.
2. REFER TO INDEX 711-001 FOR SPECIAL EMPHASIS CROSSWALK MARKING INSTALLATION GUIDELINES.
3. CROSSWALK WIDTHS: INTERSECTION CROSSWALK 6' FOR MINIMUM, 10' FOR STANDARD. MID-BLOCK CROSSWALK 10' FOR MINIMUM.
4. ALL CROSSWALK MARKINGS MUST BE WHITE.

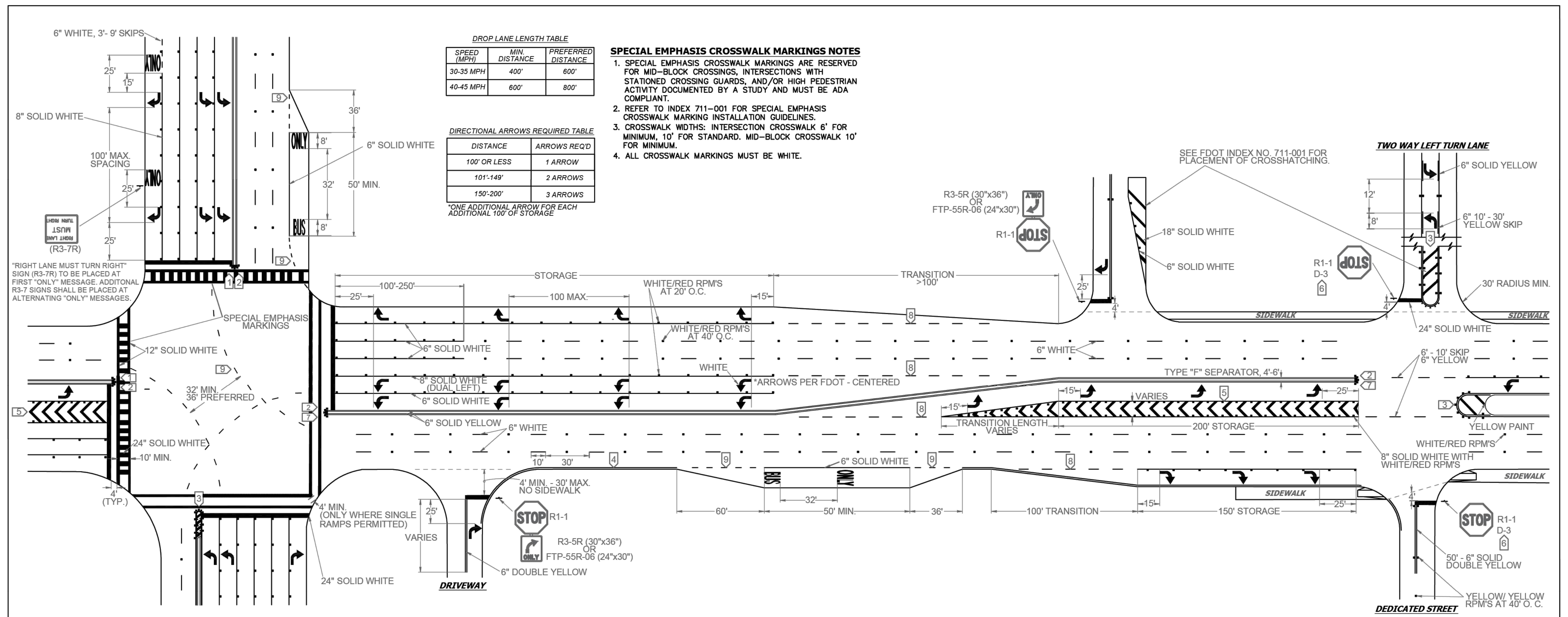

NOTES
1. ALL PAVEMENT MARKINGS SHALL BE ALKYD BASED THERMOPLASTIC AND FULLY RETROREFLECTORIZED.
2. ALL PAVEMENT MARKINGS ON PAVER SYSTEMS SHALL BE 3M 380/381 SERIES TAPE OR EQUIVALENT AND APPLIED WITH P60 ADHESIVE AS PER MANUFACTURERS SPECIFICATIONS.
3. ALL PAVEMENT MARKINGS AND SIGNING SHALL BE IN ACCORDANCE WITH THE "MANUAL ON UNIFORM TRAFFIC CONTROL DEVICES", BCTED STANDARDS, AND FDOT DESIGN STANDARDS.
4. SEE FDOT INDEX NO 706-001 FOR PLACEMENT OF RPM's (FOR BULLNOSE RPM TREATMENT, SEE LEGEND NO. 1)
5. RPM's SHALL BE CLASS "B" OR EQUIVALENT, APPLIED WITH EPOXY OR BITUMINOUS ADHESIVE.
6. FDOT APPROVED SEALER SHALL BE USED WHEN APPLYING MARKINGS ON CONCRETE.
7. FOR BIKE LANE DETAILS SEE FDOT INDEX NO. 711-002.
8. EXISTING MARKINGS SHALL BE REMOVED BY WATER BLASTING OR SAND BLASTING.
9. ALL STOP LINES TO BE 4' BEHIND CROSSWALK OR SIDEWALK.
10. PAVEMENT MARKING REFLECTIVITY SHALL BE UNIFORM ACROSS THE ENTIRE STRIPE AND SHALL HAVE A MINIMUM REFLECTIVITY READING OF 250 MILLICANDELAS FOR WHITE AND 175 MILLICANDELAS FOR YELLOW.
11. ALL PRODUCTS MUST BE ON FDOT'S APPROVED PRODUCTS LIST (APL).
12. RPMS SHALL NOT BE INSTALLED ADJACENT TO BIKE LANES.
13. LONGITUDINAL CROSSWALK MARKINGS SHALL BE INSTALLED AT ALL CROSS STREETS ON COUNTY ROADS THAT ARE FOUR LANES OR GREATER.

LEGEND

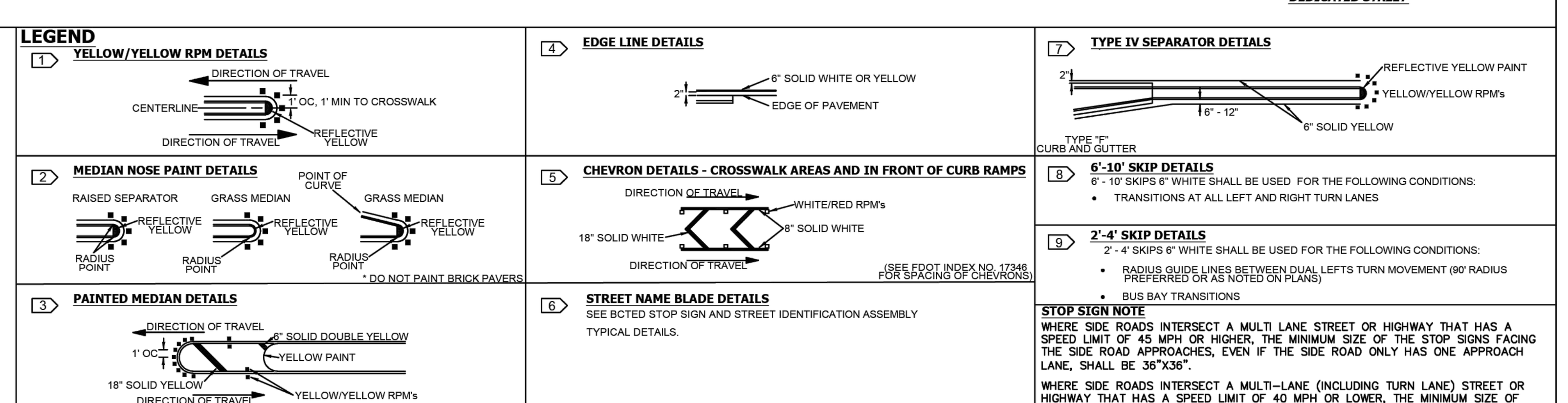

8 **6'-10' SKIP DETAILS**
6' - 10' SKIPS 6" WHITE SHALL BE USED FOR THE FOLLOWING CONDITIONS:
- TRANSITIONS AT ALL LEFT AND RIGHT TURN LANES

9 **2'-4' SKIP DETAILS**
2' - 4' SKIPS 6" WHITE SHALL BE USED FOR THE FOLLOWING CONDITIONS:
- RADIUS GUIDE LINES BETWEEN DUAL LEFTS TURN MOVEMENT (90' RADIUS PREFERRED OR AS NOTED ON PLANS)
- BUS BAY TRANSITIONS

STOP SIGN NOTE
WHERE SIDE ROADS INTERSECT A MULTI LANE STREET OR HIGHWAY THAT HAS A SPEED LIMIT OF 45 MPH OR HIGHER, THE MINIMUM SIZE OF THE STOP SIGNS FACING THE SIDE ROAD APPROACHES, EVEN IF THE SIDE ROAD ONLY HAS ONE APPROACH LANE, SHALL BE 36"X36".

WHERE SIDE ROADS INTERSECT A MULTI-LANE (INCLUDING TURN LANE) STREET OR HIGHWAY THAT HAS A SPEED LIMIT OF 40 MPH OR LOWER, THE MINIMUM SIZE OF THE STOP SIGN FACING THE SIDE ROAD APPROACHES SHALL BE 36"X36".

REVISIONS	
DATE	DESCRIPTION
11-24-2020	UPDATED NOTES
04-14-2021	UPDATED NOTES
05-06-2022	UPDATED NOTES

BROWARD COUNTY FLORIDA

PUBLIC WORKS DEPARTMENT
TRAFFIC ENGINEERING DIVISION
DESIGN BY: CARMELO CARATOZZOLO, P.E. | SCALE: NTS
DRAWN BY: STEPHON RAMOUTAR
CHECKED BY: CARMELO CARATOZZOLO, P.E.

PAVEMENT MARKINGS AND SIGNS DETAILS

SHEET NO. 1 OF 1

URBN DESIGN

666 N.E. 125th STREET, SUITE 247
NORTH MIAMI, FL 33161
Phone: 305.720.2079
C.O.A. 33221

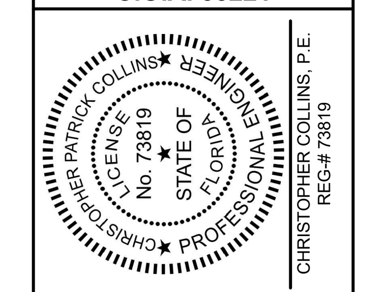

3/11/2024

This item has been digitally signed and sealed by Christopher P. Collins, P.E. on the date adjacent to the seal.

Printed copies of this document are not considered signed and sealed and the signature must be verified on any electronics copies.

Christopher Collins — Digitally signed by Christopher Collins Date: 2025.05.28 13:56:52 -04'00'

Revision	Date
Revision 6 Comment	
Revision 5 Comment	
Revision 4 Comment	
Revision 3 Comment	
Revision 2 Comment	
Revision 1 Comment	

Designed by:	C.P.C.
Drawn by:	A.T.S.
Checked by:	C.P.C.
Approved by:	C.P.C.
Scale:	N.T.S.
Date:	05/25/2022
Job No.:	I002

© 2025

Plans for

FESTIVAL MARKETPLACE
2900 W SAMPLE ROAD
POMPANO BEACH, FLORIDA

BROWARD COUNTY STANDARD DETAILS

Sheet No.
C-11.1

Sunshine 811
Call 811 or visit sunshine811.com two full business days before digging to have buried facilities located and marked.
Check positive response codes before you dig!

5/23/2025 10:01pm
C:\Users\...\My ShareSync\I002\Civil\DWG\C-11.0 GENERAL DETAILS.dwg

DRC

PZ22-12000027

10/01/2025